TECHNICAL INFORMATION, *CONTINUED*

PARTS LIST
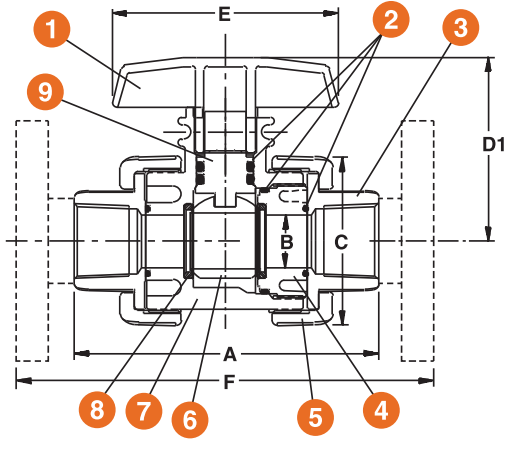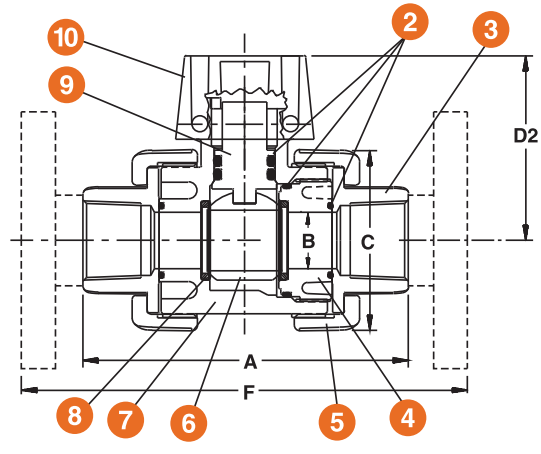
1. Handle
2. O-Ring Seals
3. End Connector
4. Seal Retainer
5. Union Nut
6. Ball
7. Body
8. PTFE Seat
9. Stem
10. Actuator Mounting Pad